HITACHI

LIST NO. E829

# ELECTRIC TOOL PARTS LIST

## ■CORDLESS IMPACT DRILL
## Model DV 10DA

1993・2・2
(E2)

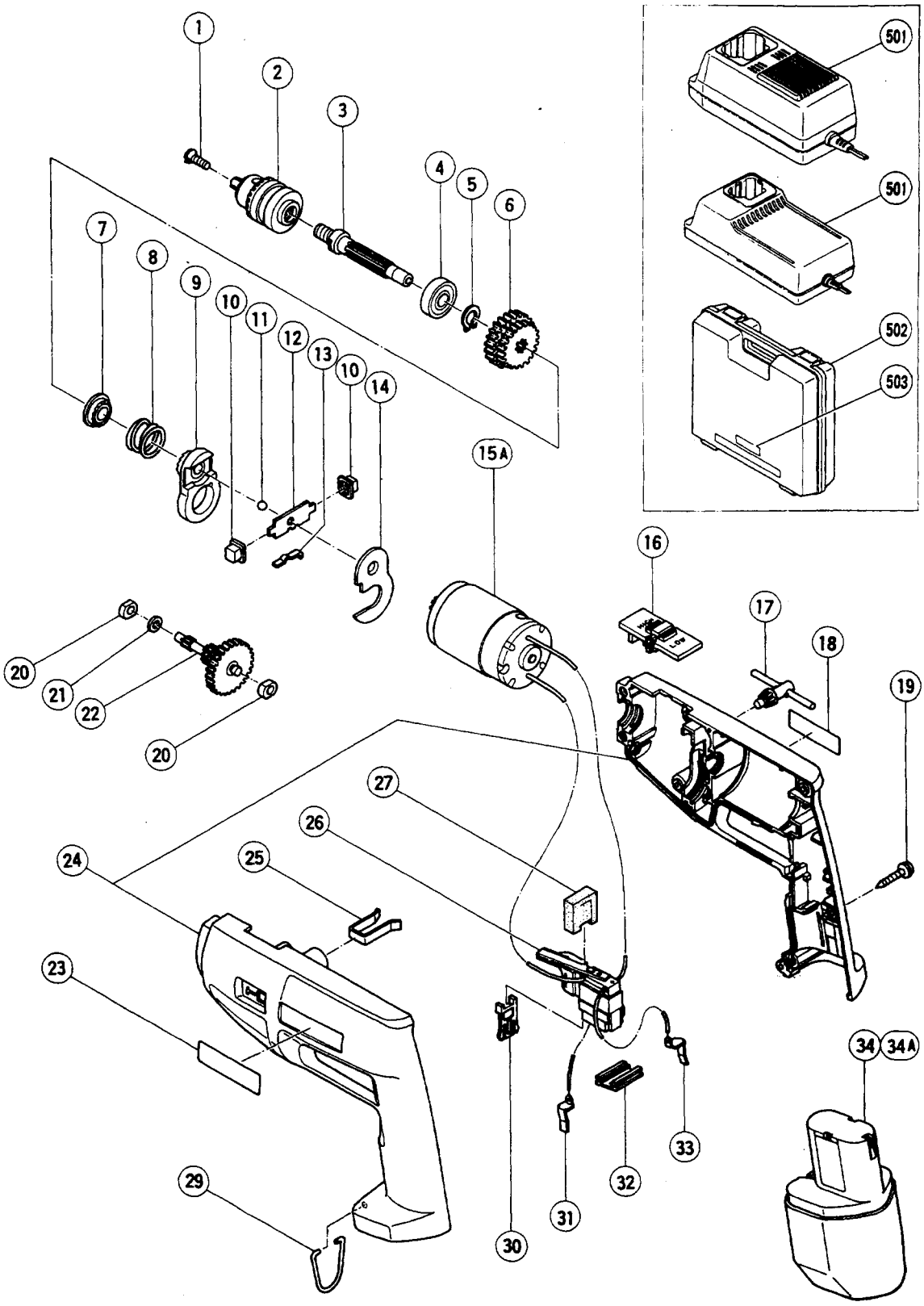

| | ITEM NO. | CODE NO. | DESCRIPTION | NO. USED | REMARKS | |
|---|---|---|---|---|---|---|
| | 1 | 992-077 | FLAT HD. SCREW (LEFT HAND) M5X17 | 1 | | |
| | 2 | 950-292 | DRILL CHUCK 10TLRA | 1 | INCLUD.17 | |
| | 3 | 300-021 | SPINDLE | 1 | | |
| | 4 | 600-1DD | BALL BEARING 6001DDUCMPS2S | 1 | | |
| | 5 | 939-542 | RETAINING RING FOR D12 SHAFT (10 PCS.) | 1 | | |
| | 6 | 982-444 | FINAL GEAR | 1 | | |
| | 7 | 300-022 | RATCHET | 1 | | |
| | 8 | 300-023 | SPRING (A) | 1 | | |
| | 9 | 987-074 | HOLDER | 1 | | |
| | 10 | 963-225 | CHANGE KNOB | 2 | | |
| | 11 | 959-149 | STEEL BALL D4.76 (10 PCS.) | 1 | | |
| | 12 | 963-224 | CHANGE PLATE | 1 | | |
| | 13 | 963-226 | SPRING (A) | 1 | | |
| | 14 | 987-075 | PLATE | 1 | | |
| | 15A | 305-081 | MOTOR | 1 | | |
| | 16 | 300-025 | SHIFT KNOB | 1 | | |
| | 17 | 980-057 | CHUCK WRENCH 10TL2 | 1 | | |
| | 18 | | CAUTION PLATE | 1 | | |
| | 19 | 982-095 | TAPPING SCREW (W/WASHER) D4X20 | 7 | | |
| | 20 | 997-752 | METAL | 2 | | |
| | 21 | 949-425 | WASHER M6 (10 PCS.) | 1 | | |
| | 22 | 982-443 | SECOND PINION | 1 | | |
| | 23 | | NAME PLATE | 1 | | |
| | 24 | 300-026 | HOUSING (A).(B) SET | 1 | | |
| | 25 | 980-837 | KEY HOLDER | 1 | | |
| | 26 | 995-426 | SWITCH (2P PLUG IN TYPE) W/O LOCK | 1 | | |
| | 27 | 980-834 | SEAL | 1 | | |
| | 29 | 980-838 | HOOK | 1 | | |
| | 30 | 980-833 | SWITCH LOCK | 1 | | |
| | 31 | 995-427 | TERMINAL | 1 | | |
| | 32 | 991-666 | TERMINAL SUPPORT | 1 | | |
| | 33 | 995-428 | TERMINAL | 1 | | |
| * | 34 | 300-002 | BATTERY EB 12 (W/ENGLISH N.P.) | 1 | | |
| * | 34 | 300-004 | BATTERY EB 12 (W/ENGLISH N.P.) | 1 | FOR USA,CAN | |
| * | 34 | 300-001 | BATTERY EB 12 (W/GERMAN N.P.) | 1 | | |
| * | 34 | 300-003 | BATTERY EB 12 (W/FRENCH N.P.) | 1 | | |
| * | 34A | 302-758 | BATTERY EB 12 (W/ENGLISH N.P.) | 1 | FOR HOL,DEN,SWE,SUI,NOR | |
| * | 34A | 302-973 | BATTERY EB 12 (W/GERMAN N.P.) | 1 | FOR BEL | |
| * | 34A | 306-200 | BATTERY EB 12 (W/ITALIAN N.P.) | 1 | FOR ITA | |

*: ALTERNATIVE PARTS

## STANDARD ACCESSORIES

| ITEM NO. | CODE NO. | DESCRIPTION | NO. USED | REMARKS | |
|---|---|---|---|---|---|
| 501 | | CHARGER (MODEL UC 12Y) | 1 | DEPENDING ON ORDER SPEC. | |
| 501 | | CHARGER (MODEL UC 12YA) | 1 | DEPENDING ON ORDER SPEC. | |
| 502 | 303-346 | CASE | 1 | | |
| 503 | | HITACHI LABEL | 1 | | |
| 518 | 301-833 | ADAPTER (W/GERMAN CAUTION PLATE) | 1 | | |

## OPTIONAL ACCESSORIES

| ITEM NO. | CODE NO. | DESCRIPTION | NO. USED | REMARKS | |
|---|---|---|---|---|---|
| 601 | 931-851 | DRILL BIT (B) D6.5X100 | 1 | | |
| 602 | 931-852 | DRILL BIT (B) D8.0X100 | 1 | | |
| 603 | 931-853 | DRILL BIT (B) D9.5X120 | 1 | | |
| 604 | 931-854 | DRILL BIT (B) D10.0X120 | 1 | | |
| 605 | 955-670 | + DRIVER BIT (A) NO.1 70L | 1 | | |
| 606 | 955-654 | + DRIVER BIT (A) NO.2 70L | 1 | | |

★ : ALTERNATIVE PARTS

## STANDARD ACCESSORIES

DV 10DA

| ITEM NO. | CODE NO. | DESCRIPTION | NO. USED | REMARKS | |
|---|---|---|---|---|---|
| 501 | | CHARGER (MODEL UC 12Y) | 1 | DEPENDING ON ORDER SPEC. | |
| 501 | | CHARGER (MODEL UC 12YA) | 1 | DEPENDING ON ORDER SPEC. | |
| 502 | 303-346 | CASE | 1 | | |
| 503 | | HITACHI LABEL | 1 | | |
| 518 | 301-833 | ADAPTER (W/GERMAN CAUTION PLATE) | 1 | | |

## OPTIONAL ACCESSORIES

| ITEM NO. | CODE NO. | DESCRIPTION | NO. USED | REMARKS | |
|---|---|---|---|---|---|
| 601 | 931-851 | DRILL BIT (B) D6.5X100 | 1 | | |
| 602 | 931-852 | DRILL BIT (B) D8.0X100 | 1 | | |
| 603 | 931-853 | DRILL BIT (B) D9.5X120 | 1 | | |
| 604 | 931-854 | DRILL BIT (B) D10.0X120 | 1 | | |
| 605 | 955-670 | + DRIVER BIT (A) NO.1 70L | 1 | | |
| 606 | 955-654 | + DRIVER BIT (A) NO.2 70L | 1 | | |

* : ALTERNATIVE PARTS