HITACHI

LIST NO. F863

ELECTRIC TOOL PARTS LIST

■ CORDLESS IMPACT DRIVER 2001・10・25

Model WH 9DM (E1)

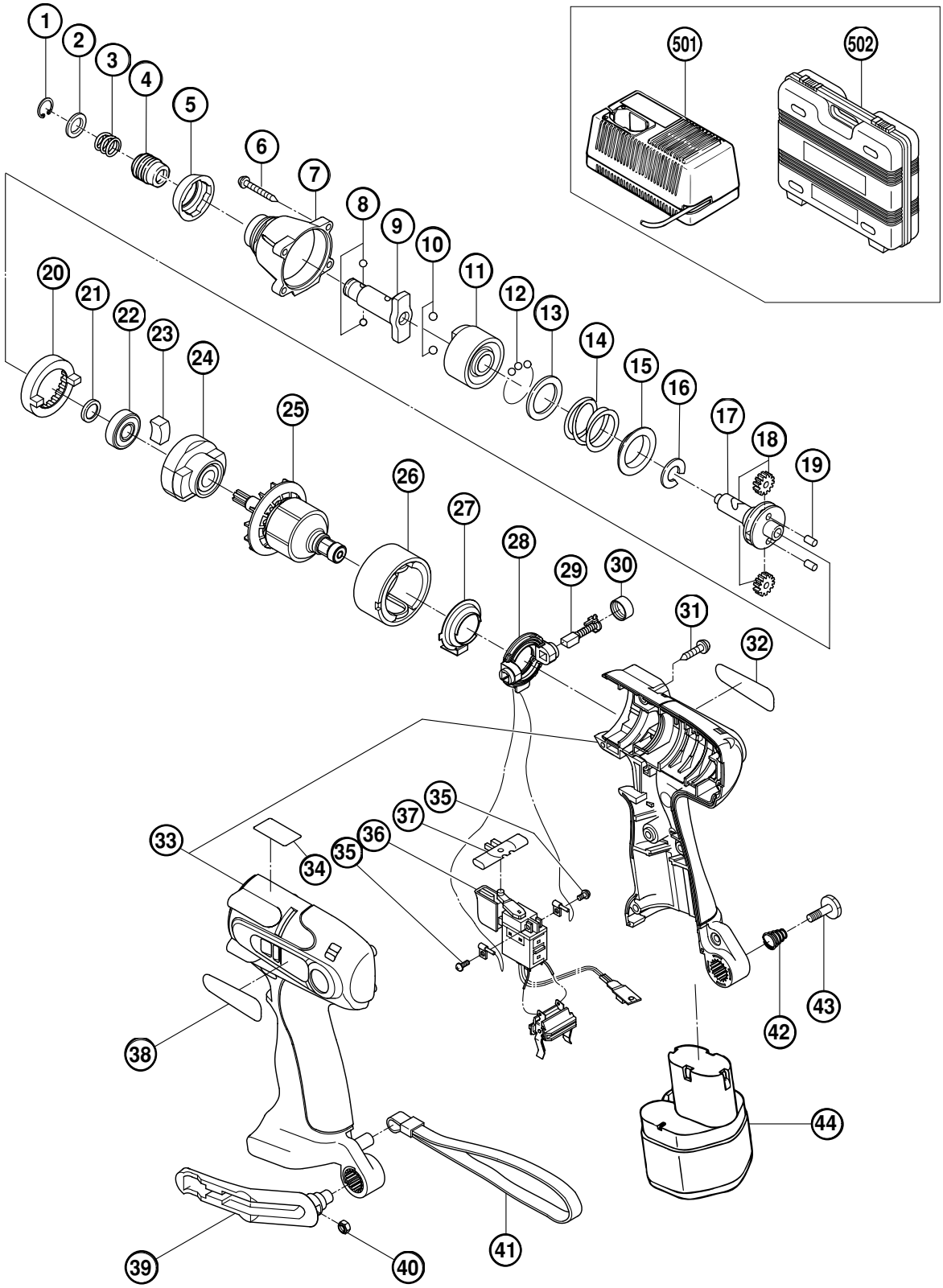

	ITEM NO.	CODE NO.	DESCRIPTION	NO. USED	REMARKS	
	1	315-984	RETAINING RING	1		
	2	315-983	WASHER (D)	1		
	3	320-409	GUIDE SPRING	1		
	4	319-921	GUIDE SLEEVE (A)	1		
	5	320-418	FRONT CAP	1		
	6	319-917	TAPPING SCREW (W/SP. WASHER) D4X25 (BLACK)	4		
	7	320-411	HAMMER CASE	1		
	8	319-535	STEEL BALL D3.5 (10 PCS.)	2		
	9	320-417	ANVIL (C)	1		
	10	959-154	STEEL BALL D5.556 (10 PCS.)	2		
	11	320-408	HAMMER (A)	1		
	12	959-148	STEEL BALL D3.175 (10 PCS.)	28		
	13	315-978	WASHER (J)	1		
	14	320-407	HAMMER SPRING (A)	1		
	15	316-172	WASHER (S)	1		
	16	316-171	STOPPER	1		
	17	319-912	SPINDLE	1		
	18	319-913	IDLE GEAR SET (2 PCS.)	2		
	19	319-914	NEEDLE ROLLER	2		
	20	319-910	RING GEAR	1		
	21	319-911	WASHER (E)	1		
	22	690-1VV	BALL BEARING 6901VVCMPS2L	1		
	23	319-909	DAMPER	2		
	24	319-908	INNER COVER	1		
	25	360-564	ARMATURE ASS'Y (W/BALL BEARING) DC 9.6V	1		
	26	319-919	MAGNET	1		
	27	319-907	DUST GUARD FIN	1		
	28	319-905	BRUSH BLOCK	1		
	29	999-054	CARBON BRUSH 5X6X11.5 (1 PAIR)	2		
	30	319-918	BRUSH CAP	2		
	31	302-086	TAPPING SCREW (W/FLANGE) D4X20 (BLACK)	7		
	32		NAME PLATE	1		
	33	320-412	HOUSING (A).(B) SET	1		
*	34		CAUTION PLATE	1	FOR USA	
	35	994-532	MACHINE SCREW (W/SP. WASHER) M3X5	2		
	36	319-906	DC-SPEED CONTROL SWITCH	1		
	37	316-166	PUSHING BUTTON	1		
	38		HITACHI LABEL	1		
	39	320-287	HOOK ASS'Y	1	INCLUD.40	
	40	320-288	V-LOCK NUT M5	1		
	41	306-952	STRAP (BLACK)	1		
	42	319-926	HOOK SPRING	1		
	43	319-927	SPECIAL SCREW M5	1		
*	44	310-377	BATTERY EB 9B (W/ENGLISH N.P.)	1		
*	44	310-451	BATTERY EB 9B (W/ENGLISH N.P.)	1	FOR USA	

* ALTERNATIVE PARTS

STANDARD ACCESSORIES

ITEM NO.	CODE NO.	DESCRIPTION	NO. USED	REMARKS	
501		CHARGER (MODEL UC 14YF2)	1		
502	320-377	CASE	1		

OPTIONAL ACCESSORIES

ITEM NO.	CODE NO.	DESCRIPTION	NO. USED	REMARKS	
601	992-671	+ DRIVER BIT (B) NO.2 50L	1		
602	992-672	+ DRIVER BIT (B) NO.3 50L	1		
603	996-177	NON-MAGNETIC HEX. SOCKET 8MM 65L	1		
604	985-329	NON-MAGNETIC HEX. SOCKET 10MM 65L	1		
605	996-178	NON-MAGNETIC HEX. SOCKET 12MM 65L	1		
606	996-179	NON-MAGNETIC HEX. SOCKET 13MM 65L	1		
607	996-180	NON-MAGNETIC HEX. SOCKET 14MM 65L	1		
608	996-181	NON-MAGNETIC HEX. SOCKET 16MM 65L	1		
609	996-182	NON-MAGNETIC HEX. SOCKET 17MM 65L	1		
610	996-197	HEX. SOCKET (LONG) 21MMX166L	1		
611	996-195	DRILL CHUCK AND ADAPTER SET	1	INCLUD.612	
612	307-543	CHUCK ADAPTER	1		
613	309-922	GREASE FOR IMPACT DRIVER (500G)	1		

* ALTERNATIVE PARTS

ITEM NO.	CODE NO.	DESCRIPTION	NO. USED	REMARKS	